# ILLUMINATOR DATA

## LTZZO170-75-2-UV375-24V

**Lighting Dimension**

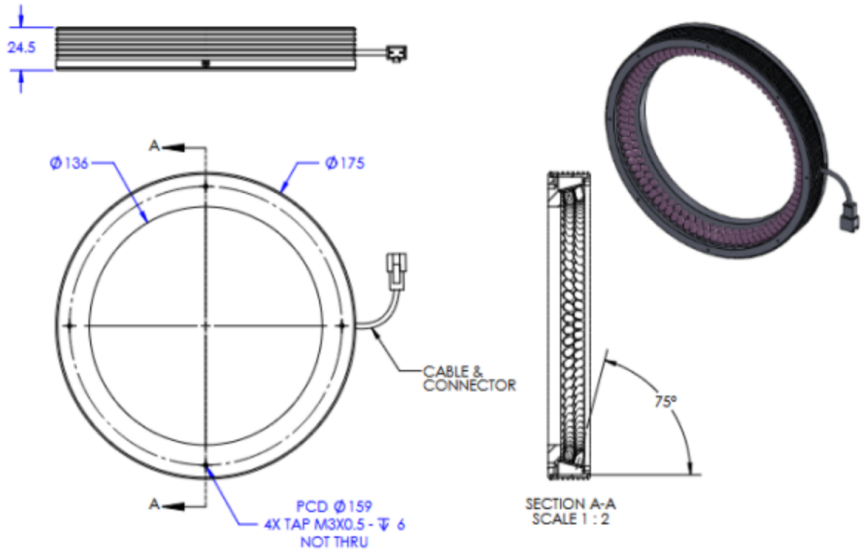


| Mechanical Information | |
|---|---|
| Casing Material | Aluminium |
| Storage Temperature Range | 0 - 45°C |
| Storage Humidity Range | 20 - 85% |
| Weight | 0g |
| Width / Inner Diameter | 136mm |
| Length / Outer Diameter | 175mm |
| Height / Thickness | 24.5mm |

# ILLUMINATOR DATA

## LTZZO170-75-2-UV375-24V

| Lighting Information | | | |
|---|---|---|---|
| LED Color | UV 375 | | |
| Wavelength | 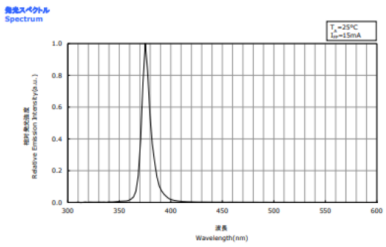 <br>370 nm - 380 nm | | |
| Working Distance | 15mm | 20mm | 25mm |
| Intensity (±15%) | 0lx | 0lx | 0lx |
| Illumination (Number of Row) | 2 | | |
| Illumination Active Area | Active Outer Diameter | 173.5 | |
| | Active Inner Diameter | 136 | |
| Emission Angle | 75° | | |
| Eye Safety Class (IEC62471) | Moderate-Risk (Class 2) | | |
| | Products with sources, which pose a potential photobiological hazard even if a human does not feel any visual or thermal discomfort which is caused btthe high intensity light. Example: This hazard level exceeds the criterion for Risk Group 1. 1,000 seconds of exposure, however, poses no acute hazard to either eye or skin, and 0.25 seconds of the intent starting causes no blue light retinal hazard. | | |
| Chromaticity Table<br>For White Colour Only | | | |

| Electrical Information | |
|---|---|
| Rated Voltage | $24V_{(Min)}$ - $24V_{(Max)}$ |
| Rated Current | 350mA |
| Power Consumption | 8.400W |
| Casing Temperature,<br>After 60 minutes operation | 60°C |

| Strobe Mode Specification | | |
|---|---|---|
| *Normal Strobe Voltage | 24V | |
| *Normal Strobe Current | 350mA | |
| Overdrive Voltage Range | Min: 36V | Max: 48V |
| Overdrive Current Range | Min: 1506mA | Max: 2080mA |
| Recommended Overdrive Voltage | 36V | |
| **Max. Trigger Pulse Duration | 10% | |
| **Max. Duty Cycle | 10msec | |

*Normal strobe means the lighting is operated using the rated power. Overdrive means the power supplied to the lighting exceeded the rated power.

**Overdrive condition must not exceed the max. trigger pulse duration and max. duty cycle.

# ILLUMINATOR DATA

## LTZZO170-75-2-UV375-24V

| Connection Information | | | |
|---|---|---|---|
| Connector Type | JST SMR-03V-B | | |
| Cable Length | 500mm | | |
| Pin Configuration | **Pin** | **Signal** | **Cable Color** |
| | 1 | 24V | RED |
| | 2 | - | - |
| | 3 | GND | WHITE / BLACK |

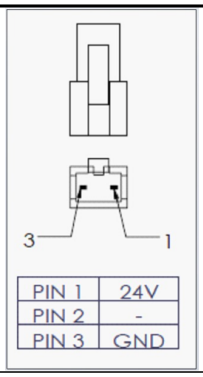


| Additional Information | |
|---|---|
| Additional Cooling Method | Attached to machine part for better heat dissipation |
| Intensity Controller Selection | LTIC series |
| CE Conformity | YES |
| RoHS Compliance | YES |

| Application | |
|---|---|
| Illumination Type | UV Illumination |
| Application Use | • Label Inspection<br>• Character Inspection<br>• Code Recognition |

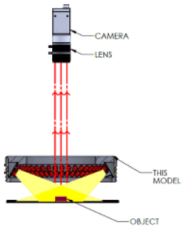


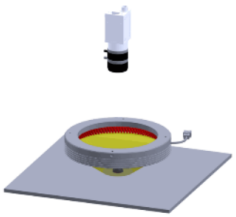

# ILLUMINATOR DATA

## LTZZO170-75-2-UV375-24V

| Lighting Pattern | | | | |
|---|---|---|---|---|
| Working Distance | For further details, please contact us | | | |
| Display and Image | For further details, please contact us | | | |
| Data Results | Horizontal | Meas. (mm) | Vertical | Meas. (mm) |
| | 90% | N.A. | 90% | N.A. |
| | 90% | N.A. | 90% | N.A. |
| | 80% | N.A. | 80% | N.A. |
| | 70% | N.A. | 70% | N.A. |
| | 60% | N.A. | 60% | N.A. |
| | 50% | N.A. | 50% | N.A. |
| | 40% | N.A. | 40% | N.A. |
| | 30% | N.A. | 30% | N.A. |
| | 20% | N.A. | 20% | N.A. |
| | 10% | N.A. | 10% | N.A. |